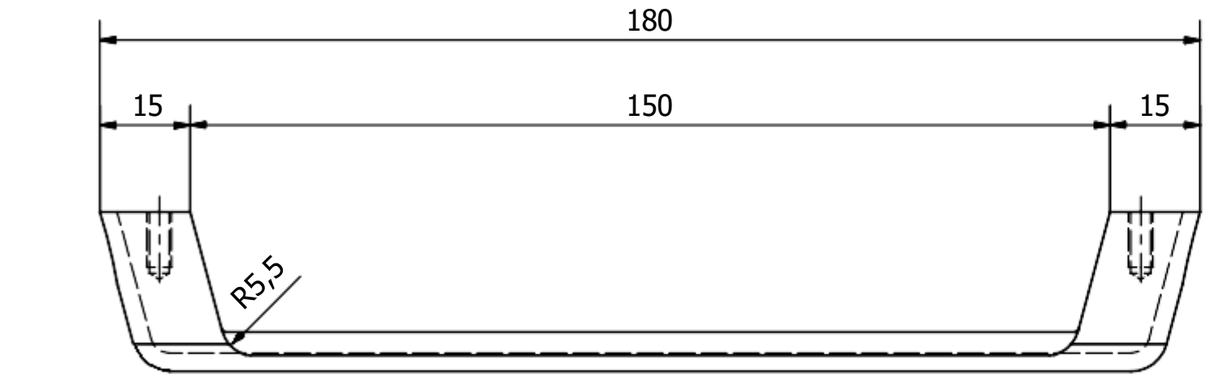

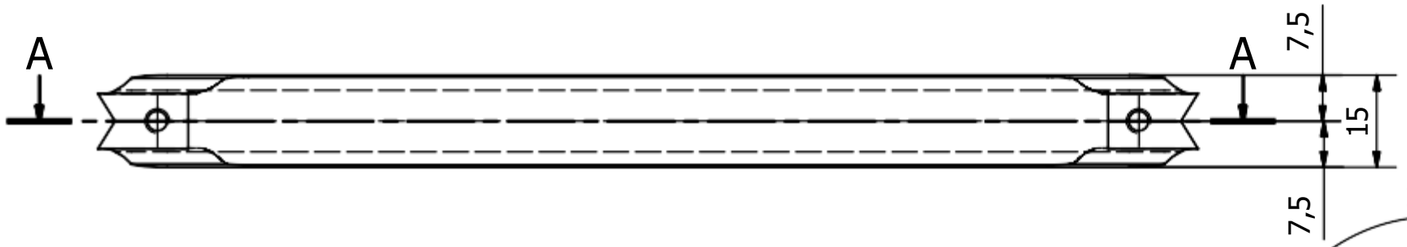

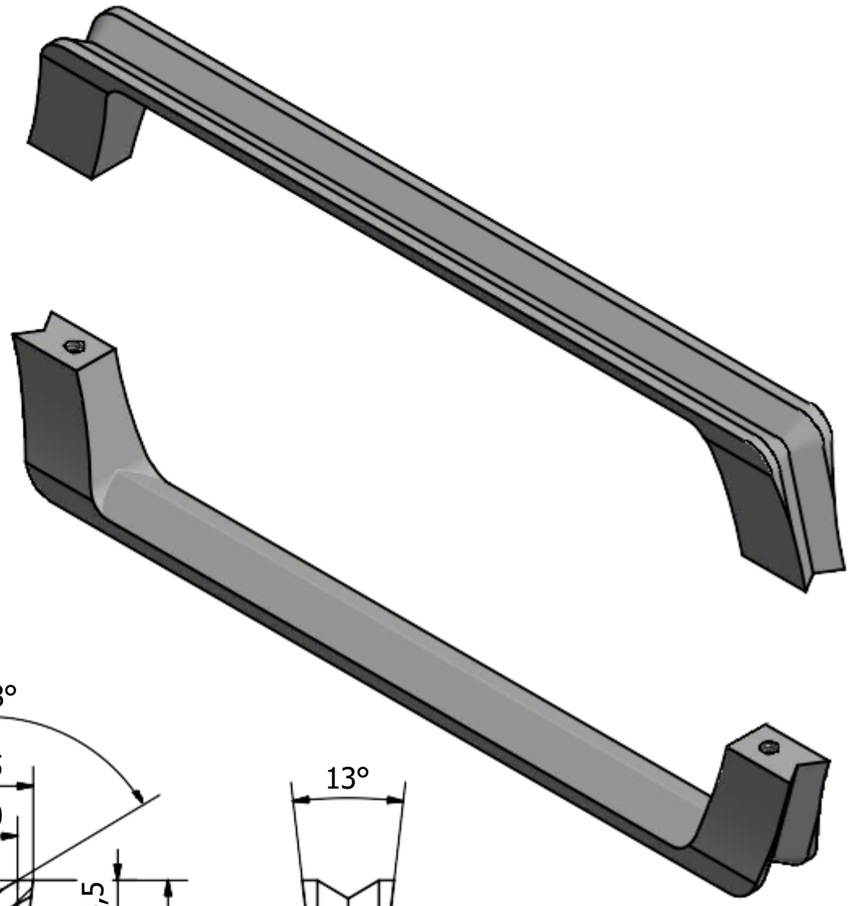

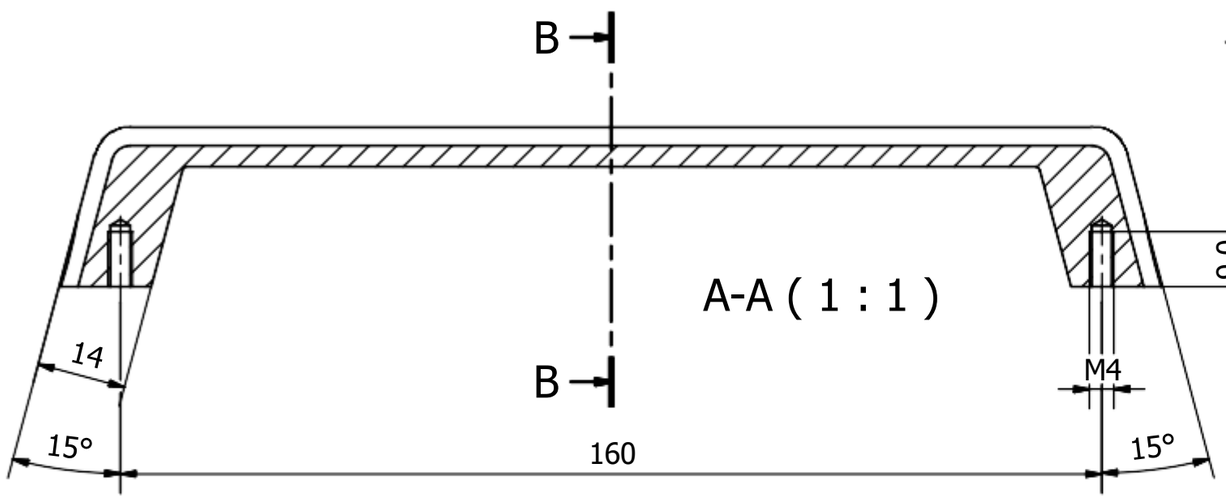

A-A (1 : 1)

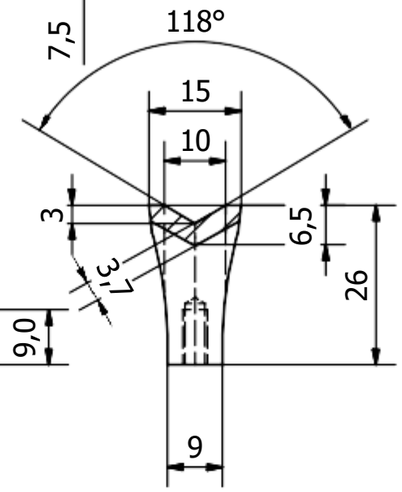

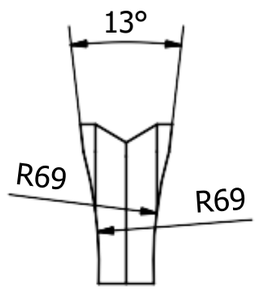

B-B (1 : 1)

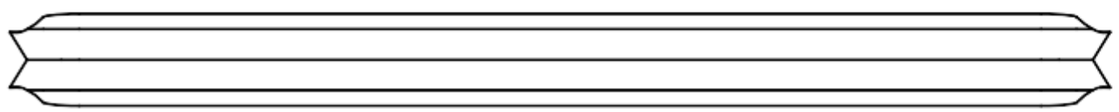

Salò
ART | DESIGN

Please note that the dimensions above are given in millimeters.

Part Number:
1134 -160